Product Data Sheet: 5003 Graf's Cradle (Rapid-Eco + Eco-Support)

Ultrasound Positioning Device with Articulated Mechanical Probe Guide for Infant Hip Sonography
Designed, Certified, and Authorized by Prof. Reinhard Graf

---

1. Product Overview

The **5003 Graf's Cradle** combines the **Rapid-Eco** positioning cradle (Product Code: 5000) and the **Eco-Support** articulated transducer guide arm (Product Code: 5001) into an integrated clinical scanning workstation.

Engineered specifically for developmental dysplasia of the hip (DDH) screening according to the Graf method, the system secures the newborn infant in the standardized lateral decubitus position. By mechanically steadying the ultrasound probe, the Eco-Support arm eliminates caudo-cranial and rotational probe-tilting artifacts, shortens total examination time, and enables a single examiner to perform complete diagnostic examinations without requiring an assistant.

---

2. Key Features & Clinical Benefits

Rapid-Eco (Positioning Cradle – Ref. 5000)

- **Self-Adjusting Lateral Support:** Weight-responsive lateral bolsters cradle the infant securely with gentle bilateral pressure, minimizing patient movement while preserving comfort.
- **Ergonomic Positioning:** Supports natural physiological flexion of the infant's hips and lower extremities, with an elevated head cushion to support the cervical spine.
- **Medical-Grade Hygiene:** Covered with seamless, fluid-impervious, washable, and disinfectable hospital-grade upholstery.
- **Single-Operator Efficiency:** Allows pediatricians, radiologists, and orthopedic specialists to scan independently and rapidly.

Eco-Support (Articulated Transducer Guide – Ref. 5001)

- **Surgical-Grade Stainless Steel Construction:** High-durability polished steel column and dual articulated links.
- **Full Multi-Axis Articulation:**
  - **360° Horizontal Rotation (Joint 1):** Full continuous rotation at the vertical base post.
  - **360° Horizontal Rotation (Joint 2):** Full continuous rotation at the articulated elbow link.
  - **360° Transducer Clamp Rotation:** Independent rotation at the clamp fixture for precise acoustic alignment with the standard coronal plane.
  - **Vertical Height Adjustment:** Smooth linear up-and-down mobility along the vertical stem to adapt to various patient anatomies.
- **Universal Probe Grip:** Secure clamp compatible with standard pediatric and small-parts linear transducers.
- **Diagnostic Accuracy:** Mechanically locks the probe in the true coronal plane, eliminating tilt-induced distortions of the chondro-osseous border and preventing false classification of alpha (α) and beta (β) angles.

---

3. Clinical Standard & Literature Rationale

> *"To perform quick and accurate scanning, a standard position for the infant and a standard scanning technique are needed. Used in combination with the cradle, the probe guide has proved very effective and facilitates scanning the infant hip, reduces scan time and considerably raising the level of precision. By correctly positioning the infant and using the probe guide system, tilting errors can be virtually eliminated."*
> — **Essentials of Infant Hip Sonography**, p. 25 (R. Graf, K. Lercher, S. Scott, T. Spieß)

Target Clinical Specialties

- Pediatric Orthopedic Surgeons & General Orthopedists
- Pediatric Radiologists & Clinical Sonographers
- General Pediatricians & Neonatologists
- Neonatal Intensive Care and Screening Units

---

4. Technical Specifications & Dimensions

General Product Information

Parameter	Specification
Complete System Code	**5003** (Rapid-Eco + Eco-Support)
Component Reference Codes	5000 (Rapid-Eco Cradle) / 5001 (Eco-Support Arm)
Country of Manufacture	Italy
Customs Tariff / HS Code	9402.90.00
Classification	Medical Ultrasound Positioning Accessory
Total Net / Gross Weight	Approx. 7.3 kg
Dimensions	75 x 43 x 37 cm
Recommended Operating / Storage Temp.	+25 °C (ambient clinical conditions)

Cradle Dimensions (Rapid-Eco – Ref. 5000)

Dimension Feature	Value	Clinical / Technical Function
Base Plate Total Length	745 mm	Solid wooden foundation plate with arm mount points
Base Plate Total Width	425 mm	Stable clinical tabletop footprint
Infant Body Channel Length	440 mm	Longitudinal body cradle section
Infant Channel Adjustable Width	140 mm – 200 mm	Adjustable lateral bolsters for neonates and infants
Infant Channel Height	190 mm	Lateral bolster wall height
Head Cushion Length	255 mm	Ergonomic cervical support pad

Probe Guide Arm Dimensions (Eco-Support – Ref. 5001)

Dimension Feature	Value	Clinical / Technical Function
Vertical Column Height	340 mm	Rigid upright mounting post
Mounting Flange Diameter	Ø 80 mm	Fixed to base plate via countersunk bolts
Primary Articulated Arm Length	250 mm	First horizontal arm section (360° rotation)
Secondary Articulated Arm Length	250 mm	Second horizontal arm section (360° rotation)
Probe Stem Vertical Travel Range	230 mm	Up-and-down height adjustment shaft
Probe Holder Clamp Rotation	360°	Multi-angle rotation fixture

---

5. Cleaning, Disinfection & Maintenance

- **Cradle Upholstery:** Wipe surfaces after each patient using a soft cloth moistened with mild hospital disinfectant (alcohol-free quaternary ammonium compounds or neutral pH medical detergents). Do not submerge foam cushions in liquids.
- **Stainless Steel Hardware:** Clean with standard non-abrasive hospital wipes or 70% isopropyl alcohol. Periodically check fasteners and pivot points to ensure firm, smooth articulation.

---

6. Scientific References & Clinical Evidence

- **Graf, R., Lercher, K., Scott, S., & Spieß, T.** *Essentials of Infant Hip Sonography: According to Reinhard Graf*. Springer-Verlag.
  Defines the international standard examination protocol, detailing how mechanical probe guidance and cradle positioning eliminate tilting artifacts.
- **Chlapoutakis, K., Maizen, C., Placzek, S., et al. (2023).** Hip sonography according to Graf: practical notes for the student, the examiner and the reviewer. *Medical Ultrasonography*, 25(4), 453–458. https://doi.org/10.11152/mu-4194
  Highlights the examiner's reliance on positioning cradles and probe fixtures to avoid tilting and rotation artifacts that falsely degrade measured alpha (α) angles.

- **Kraus, T., & Chiari, C. (2024).** Universal screening for developmental dysplasia of the hip in Austria: what have we learned? *Exploration of Musculoskeletal Diseases*, 2, 208–215. https://doi.org/10.37349/emd.2024.00049
  Evaluates multi-decade universal DDH screening results, affirming that cradle positioning and probe stabilization are key prerequisites for nationwide diagnostic consistency.
- **Heisinger, S., Chiari, C., Willegger, M., Windhager, R., & Kolb, A. (2024).** Clinical Evaluation of an Electronic Guidance System for Optimizing the Ultrasound Screening for Developmental Hip Dysplasia in Newborns. *Journal of Clinical Medicine*, 13(24), 7656. https://doi.org/10.3390/jcm13247656
  Demonstrates that mechanical transducer stabilization significantly suppresses roll and pitch variance, directly improving alpha angle measurement reliability.
- **Kilsdonk, I., Witbreuk, M., & Van Der Woude, H.-J. (2021).** Ultrasound of the neonatal hip as a screening tool for DDH: how to screen and differences in screening programs between European countries. *Journal of Ultrasonography*, 21(85), e147–e153. https://doi.org/10.15557/jou.2021.0024
  Reviews clinical ultrasound workflows, validating that standardized cradles keep newborns calm and properly aligned in lateral decubitus throughout the scan.

---

7. Ordering Information

Product Code	Description	Included Components
5003	**Graf's Cradle Complete**	Rapid-Eco cradle, Eco-Support arm, base plate, hardware
5000	**Rapid-Eco**	Positioning mattress, lateral bolster set, mounting base
5001	**Eco-Support**	Articulated stainless steel arm, probe clamp, base flange


440 mm
255 mm
140 mm-200 mm
180 mm
745 mm

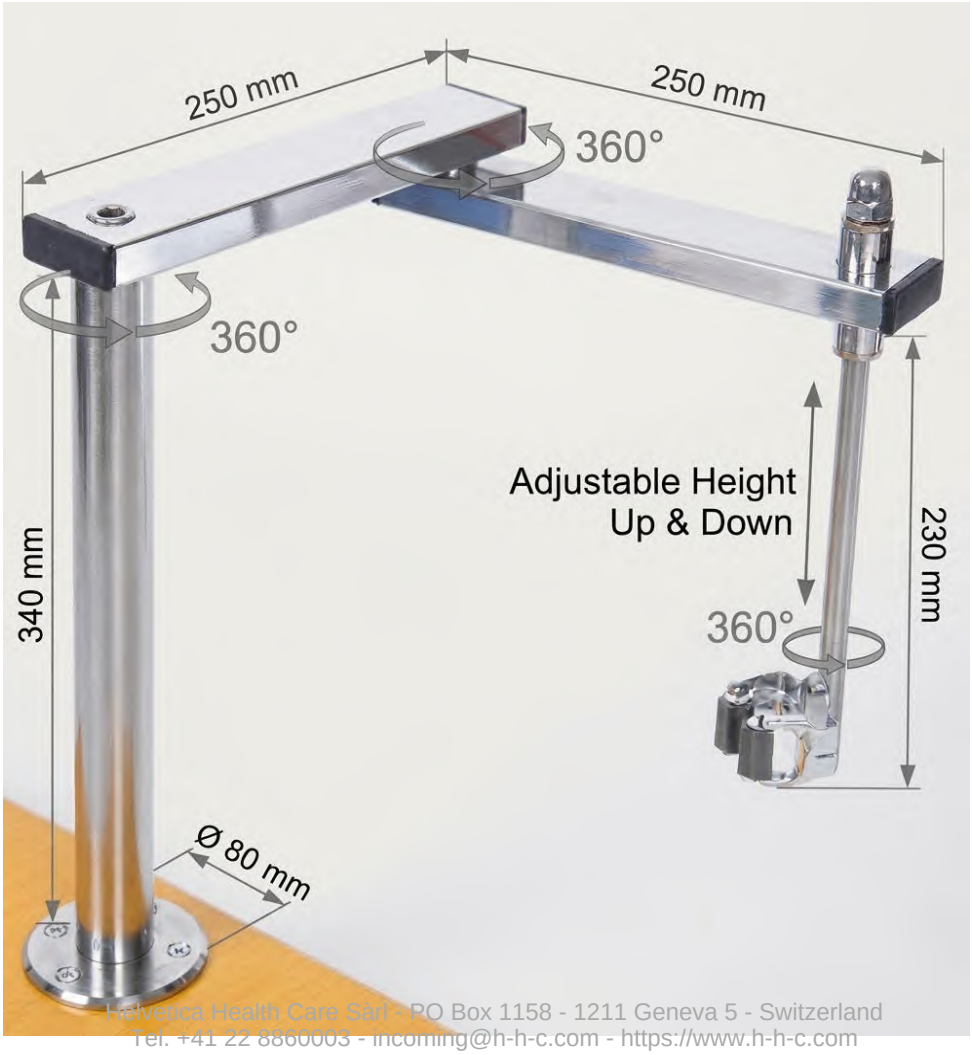
250 mm
250 mm
360°
360°
Adjustable Height
Up & Down
230 mm
360°
340 mm
Ø 80 mm